Scandrive AL
Linear actuators
Servo actuators for register control



There are many exacting demands of engineering components in a modern printing press. The ability to produce a bright and sharp colour print at high speed is a matter of extreme precision in terms of positioning the print on the paper. Adjusting the sidelay and circumferential position of the plate cylinder to within 1/100th of a mm, despite the vibrations of the press, is a critical operation.

The SKF AL family of products is specifically designed and built for this purpose. High resolution, minimal backlash and high rigidity are the primary features.

Distinct mechanical end stops prevent jamming if accidentally run outside the range. As standard, the unit is supplied with a robust stepping motor built into a housing that shields it from oil, dust and EMC problems. Both synchronous or asynchronous AC-motors are available.

A potentiometer, or an inductive gauge, indicating the zero position, are available for positional feedback. SKF is specifically geared to creating customised solutions for register actuator problems. We have successfully dealt with any number of special requirements. Ask us. We know how!

Shell cylinder register system
For perfect registration on double-wide presses, fan-out poses a problem. SKF has developed a specific solution: 2 function actuators, one at each end of the plate cylinder, enable separate sidelay and circumferential adjustments to each of the two halves of the plate cylinder to be made. No more compromises needed to determining which pages shall have preference in terms of perfect register! Another window opened to achieve “zero error” production.

Scandrive AL

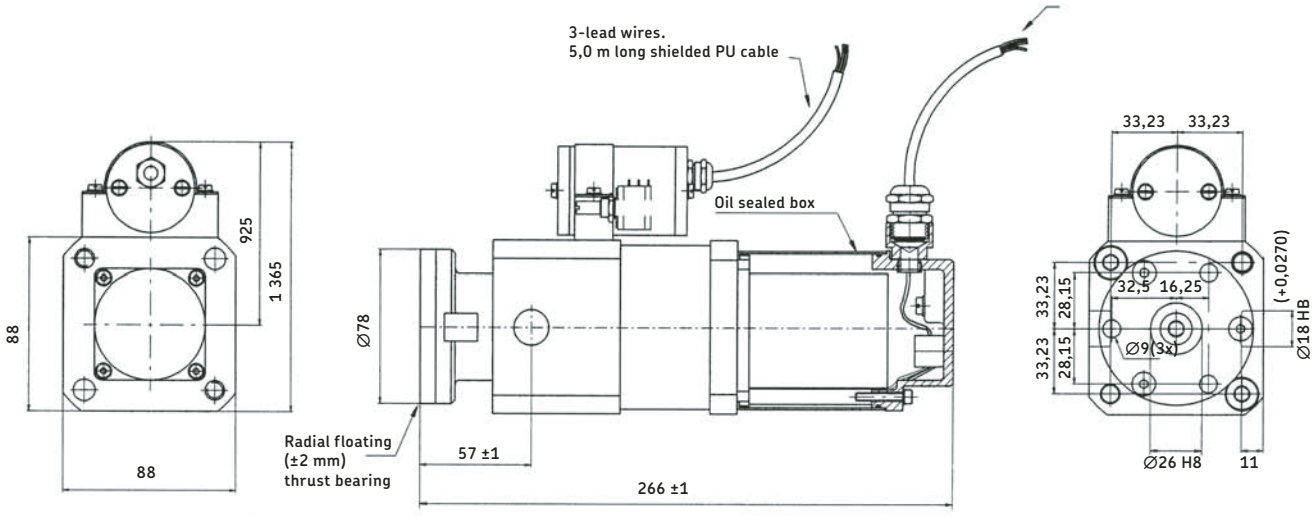

Technical features

The thrust bearing connects to the plate cylinder shaft (sidelay register) or to a helical gear wheel (circumferential register). It floats radially within ±2 mm in order to allow parallel adjustments of the plate cylinder position. The housing is mounted either flat on a console or by pivot pins. The pivot mounting allows for adjustments in inclination. The stepper motor responds to incremental movement commands with complete precision. One "half step" defines the minimum increment 0,00012 mm.

The stepper can also be programmed to work within a wide speed range, from 0 to approx 0,5 mm per second without changing any mechanical parts. If an AC-motor is used, the speed is normally determined by the AC supply frequency, be it 50 or 60 Hz. A gear motor with an additional gear ratio is used to provide the desired speed. For a wider range, an inverter may be used. With the AC-motor, the incremental movement is determined by the period for which the motor is connected. Backlash, or "lost motion", when changing direciton of motion, is critical for the sidelay register. The SKF AL is designed around a precision-cut trapezoidal screw running in a nut- and counter-nut design. These are pre-set at the factory, to eliminate all backlash. Over a period of many years, wear may cause a few 100ths of a mm backlash. If this should occur, the setting can be re-adjusted to zero in conjunction with a major overhaul.

The SKF AL unit comes as a ready-to-install unit that is fitted in virtually no time during final assembly. It is the natural answer to the modern logistic approach to the production of complex machinery: Purchae first, then have it delivered and installed "just-in-time".

Examples of customized products



RGA (variant)
Fluid media through centre.



AD (variant)
Shell-cylinder system.
Sidelay and circumference integrated.

Technical data	Unit	AL30P	AL20P	AL05P	AL05IND	RGA
Max thrust force	N	27 000	20 000	5 000	5 000	20 000
Thrust bearing capacity	C,N	25 000	25 000	25 000	25 000	80 000
Thrust bearing capacity	C0,N	65 000	65 000	65 000	65 000	199 000
Mechanical stroke	mm	6	6	17	12	8
Speed	mm/s	0 to 0,15	0 to 0,15	0 to 0,5	0 to 0,5	0 to 13
Feedback	-	Potentiometer	Potentiometer	Potentiometer	Inductive	Dual potentiometer
EMC shield	-	Yes	Yes	Yes	Optional	No

SKF Actuators AB
SE- 415 50 Gothenburg
www.actuators.skf.com

Publication **6338EN - 0607A**

SKF is a registered trademark of the SKF Group.

© SKF Group 2006
The contents of this publication are the copyright of the publisher and may not be reproduced (even extracts) unless prior written permission is granted. Every care has been taken to ensure the accuracy of the information contained in this publication but no liability can be accepted for any loss or damage whether direct, indirect or consequential arising out of the use of the information contained herein.